Istituto per le Tecnologie della Costruzione
Consiglio Nazionale delle Ricerche
Via Lombardia 49 - 20098 San Giuliano Milanese – Italy
tel: +39-02-9806.1 – Telefax: +39-02-98280088
e-mail: info@itc.cnr.it

Designated according to Article 29 of Regulation (EU) N° 305/2011.

EOTA Member
www.eota.eu
European Organisation for Technical Assessment
Organisation Européenne pour l'évaluation technique

European Technical Assessment – ETA 13/0877 of 19/06/2019

(English language translation; the original version is in Italian)

GENERAL PART

Trade name of the construction product	**C20**
Product family to which the construction product belongs	**PAC 34: BUILDING KITS, UNITS, AND PREFABRICATED ELEMENTS. Prefabricated stair kits.**
Manufacturer	**Solidarietà Intrapresa Soc. Coop. Sociale Onlus Via Campo dei Fiori, 3/b – I – 47122 Forlì (FC) – Italy**
Manufacturing plant	**Via Campo dei Fiori, 3/b – I – 47122 Forlì (FC) – Italy**
This European Technical Assessment contains:	**14 pages, including 10 Annexes which form an integral part of this Assessment**
This European Technical Assessment is issued in accordance with Regulation (EU) n° 305/2011, on the basis of	**European Assessment Document (EAD) 340006-00-0506**
This European Technical Assessment is the revision of	**European Technical Assessment 13/0877 issued on 20.06.2018**

The European Technical Assessment is issued by ITC-CNR in Italian language. Translations into other languages shall fully correspond to the original issued document and should be identified as such. Communication of this European Technical Assessment, including transmission by electronic means, shall be in full (excepted the confidential Annex(es) referred to above). However, partial reproduction can be made with the written consent of ITC-CNR (issuing Technical Assessment Body). In this case partial reproduction has to be designated as such.

SPECIFIC PARTS

1. TECHNICAL DESCRIPTION OF THE PRODUCT

"C20" is a stair kit based on a set of prefabricated components (steps, spacers, etc.) which, once assembled, form a spiral staircase. The load bearing structure is made up of a concealed steel tie-rod, "central post", 76 mm in external diameter and 2,5 mm in thickness. All around the post, which is fixed at its ends and under tensile stress, the steps and spacers are arranged which are, therefore, under compression. The stairs are available in either square or round plan with external dimensions 110, 120, 130, 140, 150 and 160 cm and may be installed, by conveniently shaping the landing step during installation, in either square or round openings. The steps are available in two typologies, either made of 40 or 60 mm thick FSC finger joint glued laminated beech ("GL" codes) or flat sheet 10 mm thick metal plate, varnished ("GM" codes). Risers may be adjusted by placing metal spacers between the steps, spaced out by Nylon spacers allowing to vary the risers by 210 mm to 230 mm with 5 mm increments. The stairs consist of 12 steps placed every 360° and may have up to 16 risers.
With regard to the railings, there are a variety of typologies with steel round balusters, steel vertical posts or vertical posts coupled with bands of tubular bars parallel to the handrail and equally distanced from each other along the whole post height, all illustrated in Annexes 5 to 7. The handrail can be made of either plastic or solid beechwood or a steel tubular bar positioned at a height of 980 ÷ 1145 mm.
The direction of rotation, clockwise or anticlockwise, is set on the installation site.
Geometry, dimensions and construction details are illustrated in Annexes 1 to 8 to this ETA.

2. SPECIFICATION OF THE INTENDED USE IN ACCORDANCE WITH EUROPEAN ASSESSMENT DOCUMENT N° EAD 340006-00-0506

"C20" stairs are intended to be used as indoor stairs in buildings of category "A" according to EN 1990 with air temperature between +5°C and +30°C and relative humidity between 30% and 70%.
The provisions made in this European Technical Assessment are based on an assumed working life of the stairs of at least 50 years, provided that the conditions laid down in clause 2.1 for installation, packaging, transport and storage as well as for appropriate use, maintenance and repair are met. The indications given on the working life cannot be interpreted as a guarantee given by the Manufacturer, but are to be regarded only as a means for choosing the appropriate products in relation to the expected economically reasonable working life of the works.

2.1 Aspects related to the performance of the product

This ETA is issued for stair kit "C20" on the basis of admitted information/data, deposited with ITC-CNR, which identify the kit that was assessed.
The characteristics of the components and of the system not mentioned in this ETA nor in the Annexes shall correspond to the respective values laid down in the Technical Documentation of this ETA, checked by ITC-CNR.
Manufacturing process scheme is deposited with ITC-CNR. Packaging, transport and storage of the components has to be such that they are protected from moisture during transport and storage. The components have to be protected against damage and well identified as part of the kit.
The information about installation and recommendations about installers' qualification and maintenance are provided with the technical documentation from the Manufacturer (Installation Manual), and it is his responsibility to assure that the information about design and installation of the system "C20" is effectively communicated to the concerned people. The information can be given using reproductions of the respective parts of this European Technical Assessment; furthermore, all the data concerning the execution shall be indicated clearly on the packaging and/or on the enclosed instruction sheets using one or several illustrations. In any case, it is appropriate to comply with national regulations, and particularly concerning fire.

The Manufacturer recommends that, in all possible layouts of the kit, the staircase is reinforced by means of a fastening device connecting the railing to a side wall, which may be placed every 4 steps as far as the staircase with a square plan is concerned and every 6 steps as far as the staircase with a round plan is concerned.
The first maintenance service is carried out after twelve months and consists in evaluating the fastening state of all the connecting screws of the different components. For the maintenance operations of the "C20" stairs the Manufacturer recommends to follow the following instructions. The stairs can be cleaned with a water-moist cloth or, if required, with a non-aggressive detergent. All cleaning tools that may cause wear on the surface of the components of the stair and all products containing abrasive agents and chemical solvents of any kind whatsoever, shall be avoided in any case.
Any localised damage due to accidental actions shall be timely repaired.

3. PERFORMANCES OF THE PRODUCT AND REFERENCE TO THE METHODS USED FOR ITS ASSESSMENT

The calculations and tests for performance assessment of "C20" were carried out in compliance with EAD 340006-00-0506 according to the methods reported herein; performances are valid as long as the components of the kit fully correspond to those described in § 1.

Essential characteristic	Performance
BWR 1: Mechanical resistance and stability	
Load-bearing capacity of the stair	See Annex 9
Load-Displacement behaviour	See Annex 9
Vibration behaviour of the stair	See Annex 9
Prevention of progressive collapse	Failure of individual components of the stair does not lead to a progressive collapse of the complete stair
Residual load-bearing capacity	Local material failure does not lead to an abrupt total loss of the load-bearing capacity of the steps
Long-term behaviour	Load-bearing capacity is ensured under an appropriate use and maintenance over the indicated working life
Resistance to earthquake	The system has been verified (see Annex 10) according to EN 1998-1. Type of soil: "C" Seismic zone: 2 Site factor: S = 1,150 Structural type: frame structure with structure factor 1 Ductility class: DCM (medium) Structure factor: single-storey one-span structure
Durability against physical, chemical, biological agents of the components of the stair	Acceptable for the intended use under appropriate use and maintenance
BWR 2: Safety in case of fire	
Reaction to fire: classification of the components of the kit	
Assessment without the need for testing according to EC Decisions	Class
Steel components according to Decisions 96/603/EC and 2000/605/EC	A1
Glued laminated timber components according to Decision 2005/610/EC	D – s2, d0
Polyamide components	No Performance Assessed
Resistance to fire	No Performance Assessed
BWR 3: Hygiene, health and the environment	
Release of formaldehyde	No Performance Assessed
Release of pentachlorophenol	No Performance Assessed
Radioactive emissions	Not relevant

Essential characteristic	Performance
BWR 4: Safety and accessibility in use	
Geometry	See Annexes 1 to 8
Slipperiness	No Performance Assessed
Safety equipment	No Performance Assessed
Safe breakage	No brittle failure of individual components
Impact resistance	No Performance Assessed

4. ASSESSMENT AND VERIFICATION OF CONSTANCY OF PERFORMANCE (AVCP) SYSTEM APPLIED, WITH REFERENCE TO ITS LEGAL BASE

4.1 System of assessment and verification of constancy of performance

According to the Decision n. 1999/89/EC of the European Commission, the system of assessment and verification of constancy of performance (AVCP) applied to this product (see Annex V to Regulation (EU) 305/2011) is System 2+.
In addition, with regard to reaction to fire, the AVCP system applied according to Decision n. 2001/596/EC is System 4.

4.2 Technical details necessary for the implementation of the AVCP system, as provided for in the applicable European Assessment Document

Technical details necessary for the implementation of the AVCP system are laid down in the control plan deposited at ITC-CNR.

Issued in San Giuliano Milanese, Italy on 19/06/2019
by ITC – CNR

Prof. Antonio Occhiuzzi
Director of ITC-CNR

Annex 1 of European Technical Assessment 13/0877: Spiral staircase "C20"

STAIRCASE WITH ROUND PLAN

Scala Ø 110 Cm.

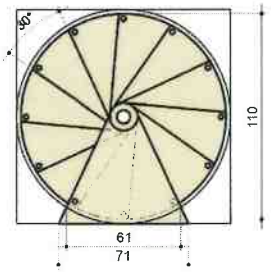

Foro min. Ø 115 (115x115).

Scala Ø 120 Cm.

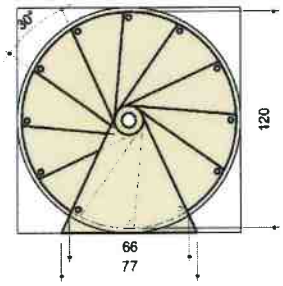

Foro min. Ø 125 (125x125).

Scala Ø 130 Cm.

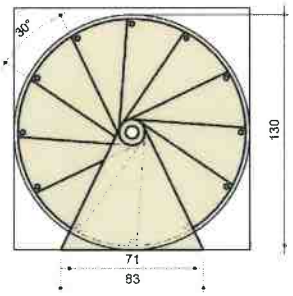

Foro min. Ø 135 (135x135).

Scala Ø 140 Cm.

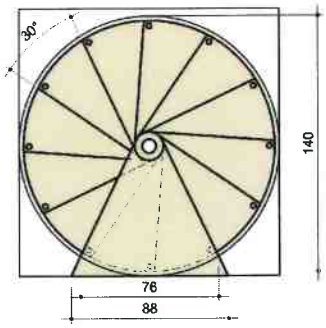

Foro min. Ø 145 (145x145).

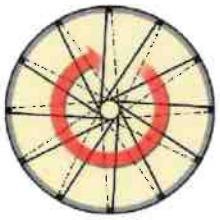

Senso di salita "ORARIO"

Scala Ø 150 Cm.

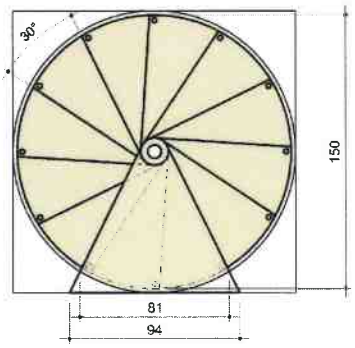

Foro min. Ø 155 (155x155).

Scala Ø 160 Cm.

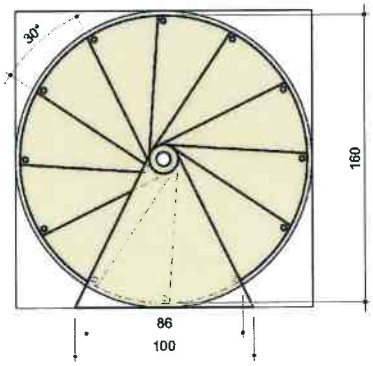

Foro min. Ø 165 (165x165).

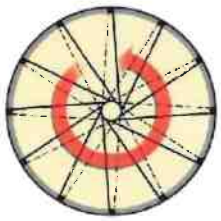

Senso di salita "ANTIORARIO"

"C20"	**Annex 1 of European Technical Assessment 13/0877: spiral staircase "C20"**
Type and geometry of the stairs with round plan, diameters (110 – 120 – 130 – 140 – 150 – 160 cm)	

Annex 2 of European Technical Assessment 13/0877: Spiral staircase "C20"

STAIRCASE WITH SQUARE PLAN

Scala Ø 110 Cm.

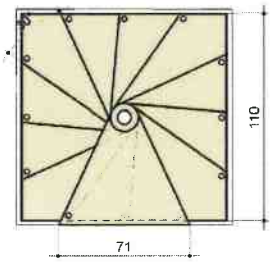

Foro min. Ø 115 (115x115).

Scala Ø 120 Cm.

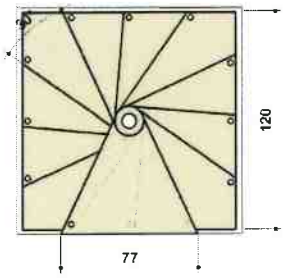

Foro min. Ø 125 (125x125).

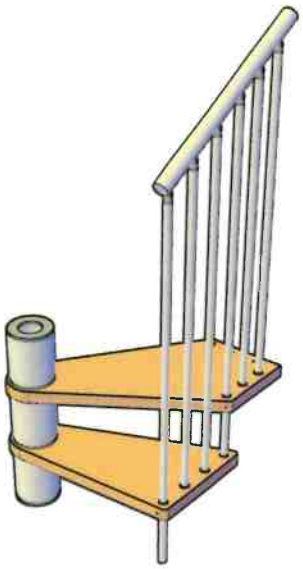

Scala Ø 130 Cm.

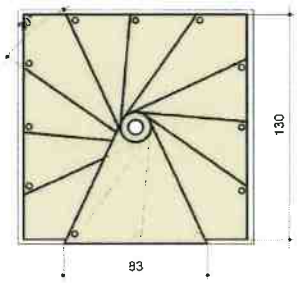

Foro min. Ø 135 (135x135).

Scala Ø 140 Cm.

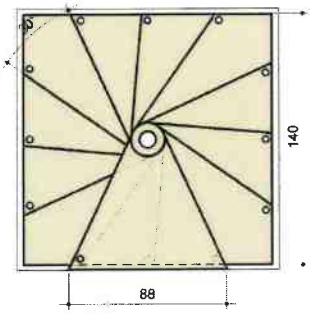

Foro min. Ø 145 (145x145).

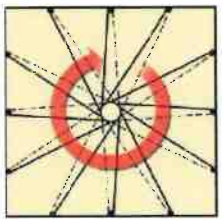

Senso di salita "ORARIO"

Scala Ø 150 Cm.

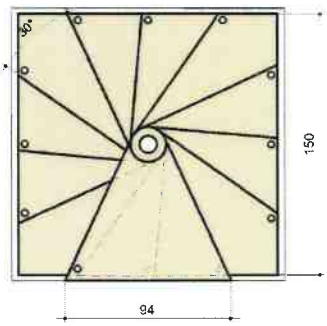

Foro min. Ø 155 (155x155).

Scala Ø 160 Cm.

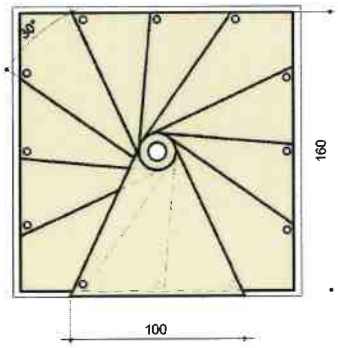

Foro min. Ø 165 (165x165).

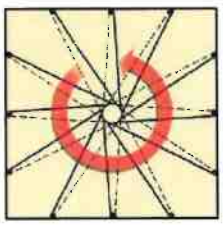

Senso di salita "ANTIORARIO"

"C20"	**Annex 2 of European Technical Assessment 13/0877: spiral staircase "C20**
Type and geometry of the stairs with square plan (110 – 120 – 130 – 140 – 150 – 160 cm)	

Annex 3 of European Technical Assessment 13/0877: Spiral staircase "C20"

Central post and intermediate steps

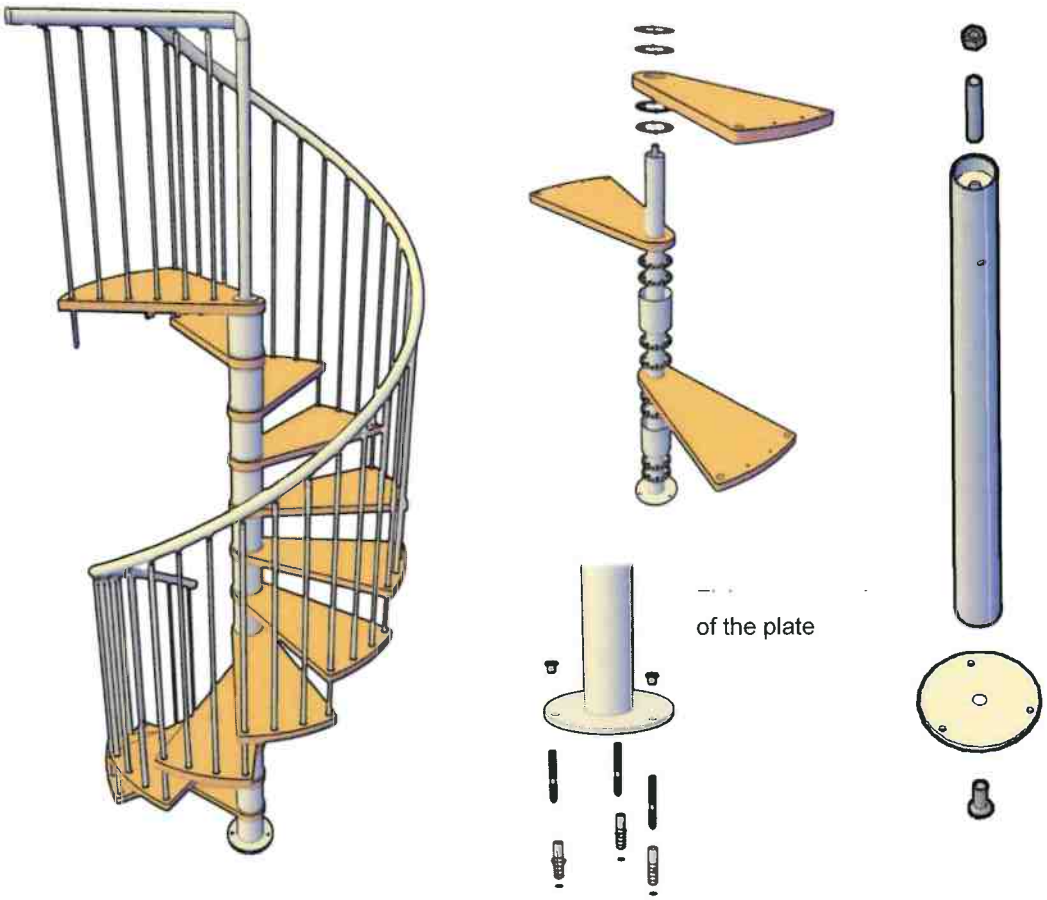

Landing step and fixing to the top floor, coplanar

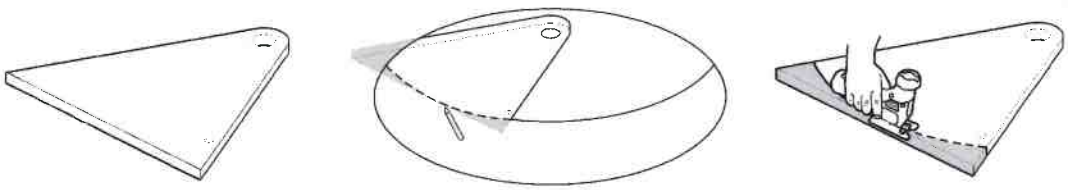

Landing with round cut

Landing with square cut

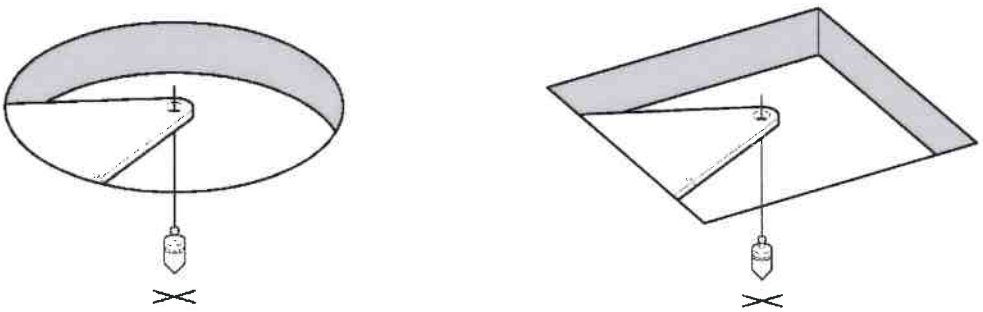

"C20"	**Annex 3 of European Technical Assessment 13/0877: spiral staircase "C20"**
Type and geometry of the stairs, details of the landing step and of the structure	

Annex 4 of European Technical Assessment 13/0877: Spiral staircase "C20"

Polyamide spacers

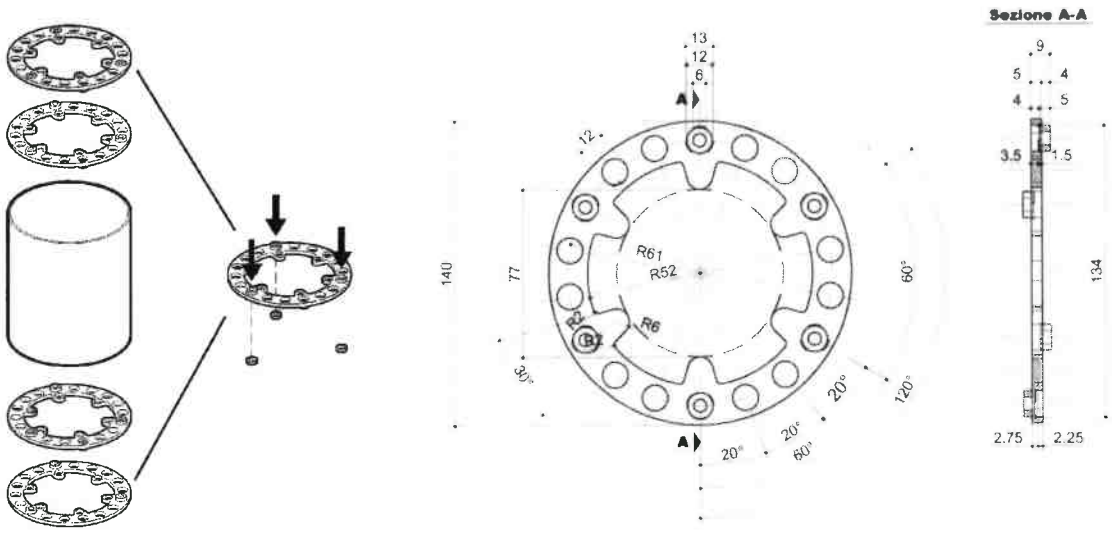

Fixing on side

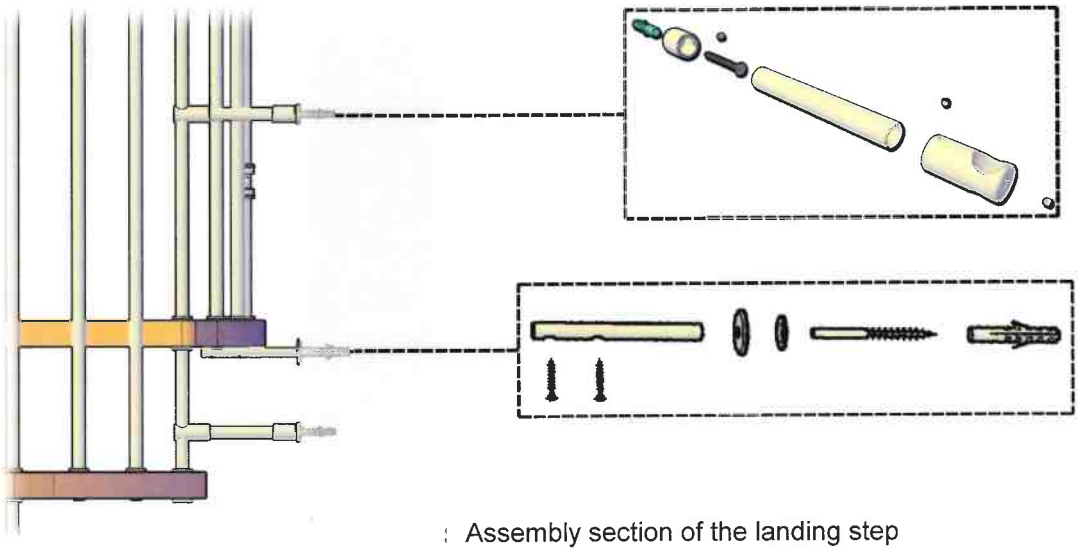

: Assembly section of the landing step

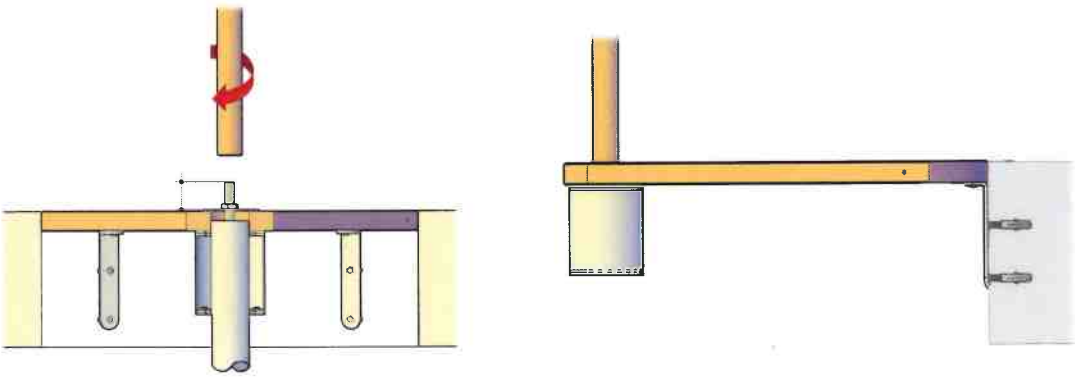

"C20"	**Annex 4 of European Technical Assessment 13/0877: spiral staircase "C20"**
Spacers, side fixings and assembly of the landing step	

Annex 5 of European Technical Assessment 13/0877: Spiral staircase "C20"

Fastening of "R2" round railing to the step

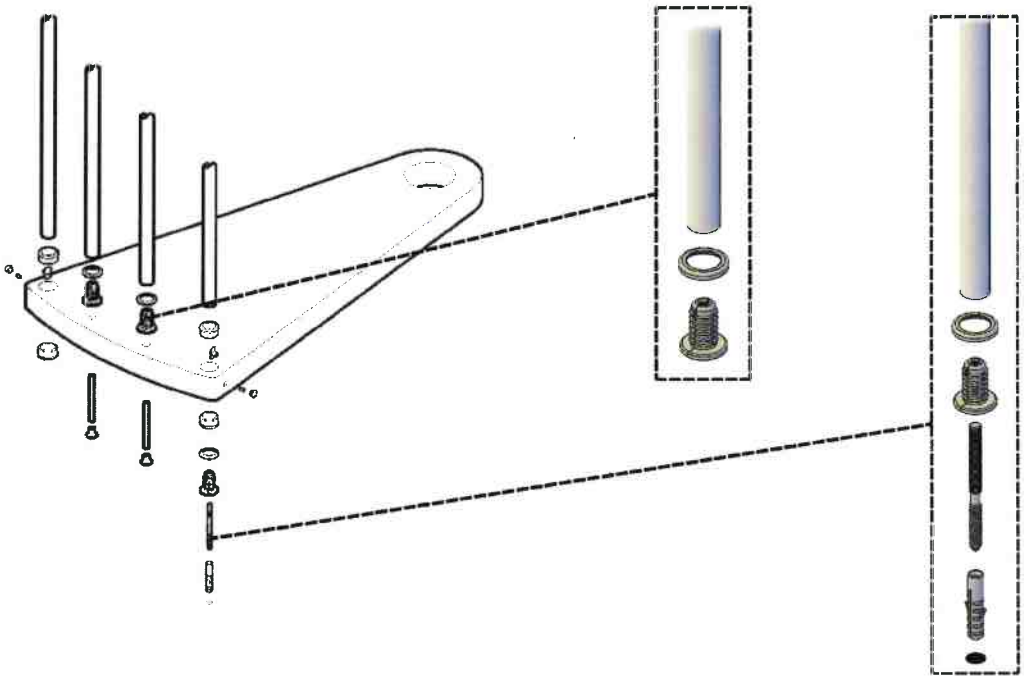

Plastic handrail and fixing of "R2" railing

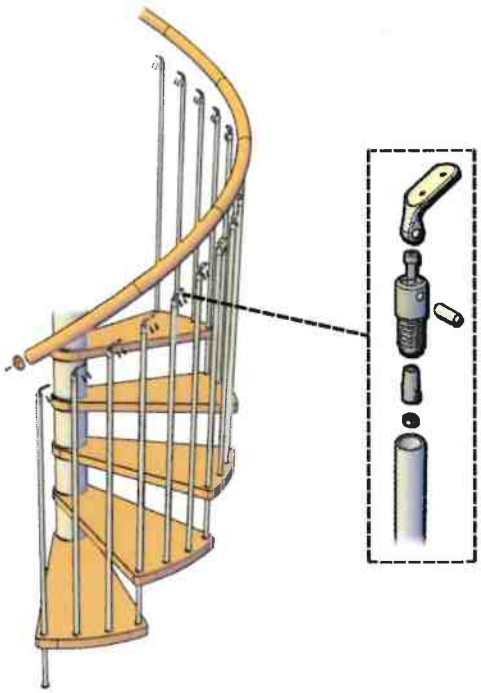

"R2" railing mounted as a barrier on the landing step

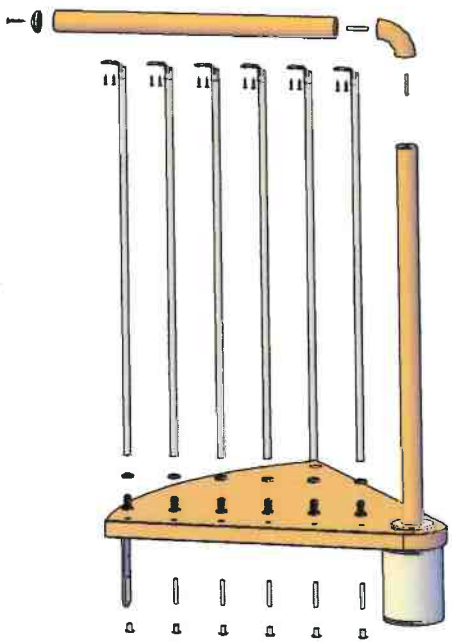

"C20"	**Annex 5 of European Technical Assessment 13/0877: spiral staircase "C20"**
Details of "R2" railing and fastening of posts to steps and to the landing step, fastening of the handrail to columns	

Annex 6 of European Technical Assessment 13/0877: Spiral staircase "C20"

Fastening of "R1" railing to the step

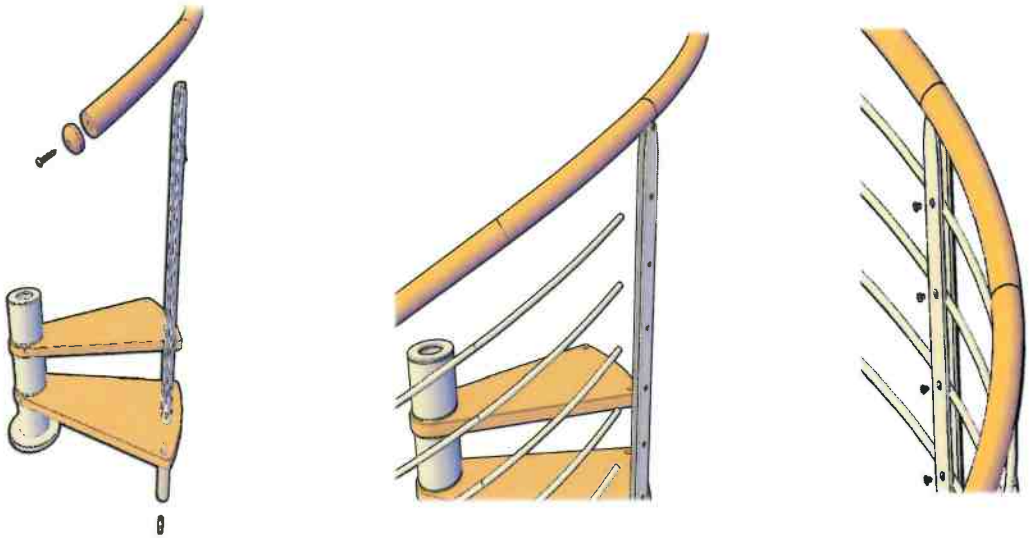

Fastening of "R4" railing to the step

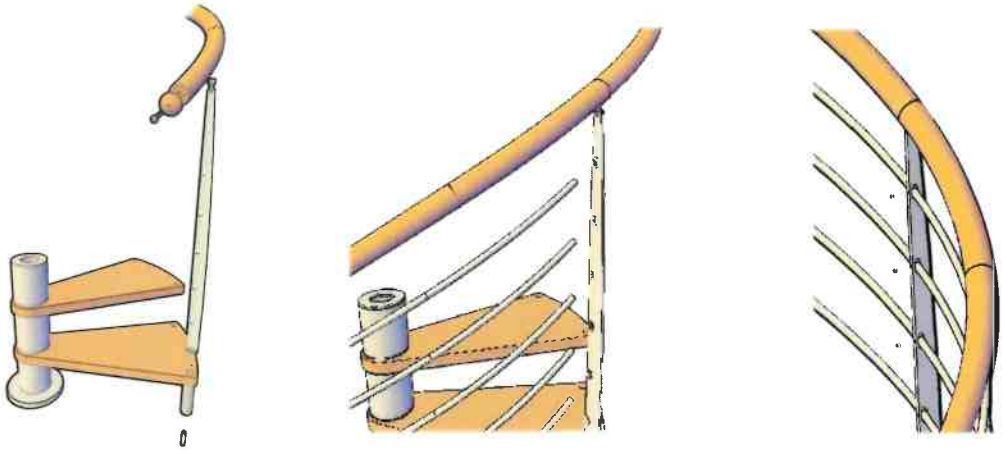

"C20"	**Annex 6 of European Technical Assessment 13/0877: spiral staircase "C20"**
Details of "R1" and "R4" railings and anchoring of the railing to steps	

Annex 7 of European Technical Assessment 13/0877: Spiral staircase "C20"

Fastening of "R5" railing to the step

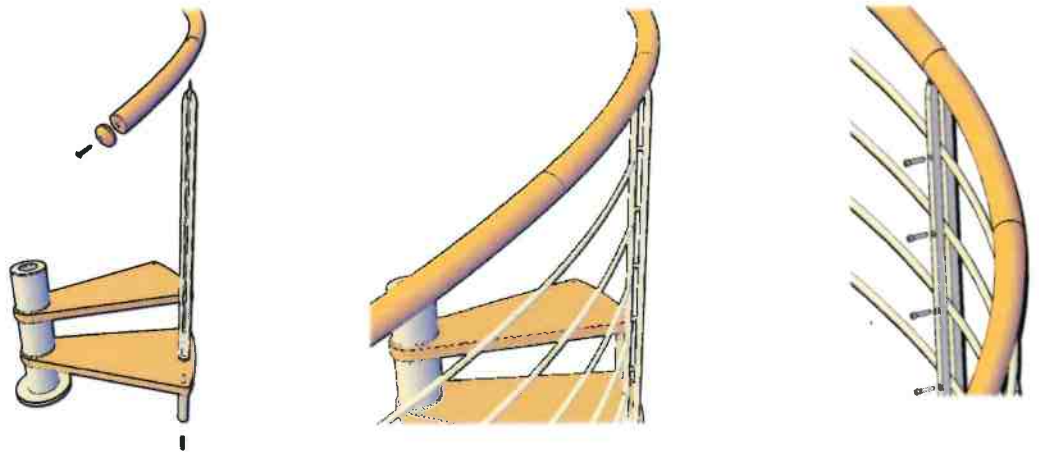

Fastening of "R6" railing to the step

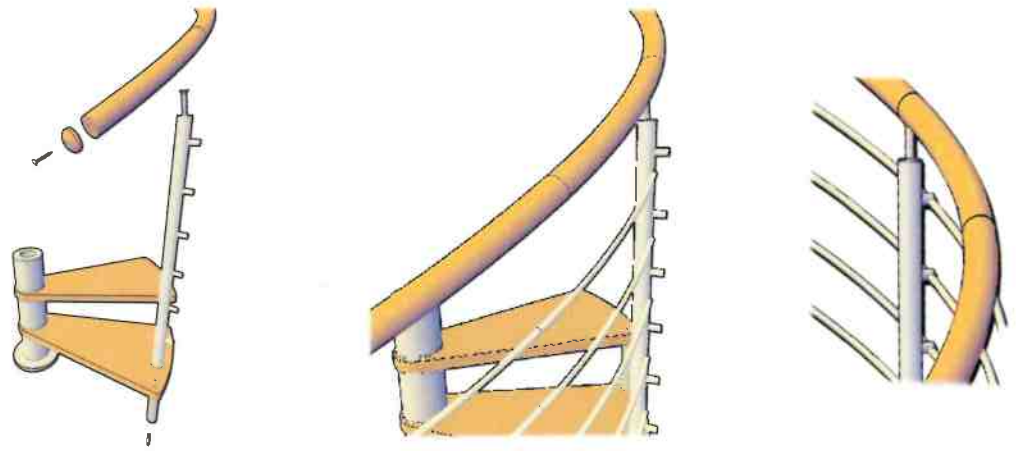

Fastening of "R10" railing to the step

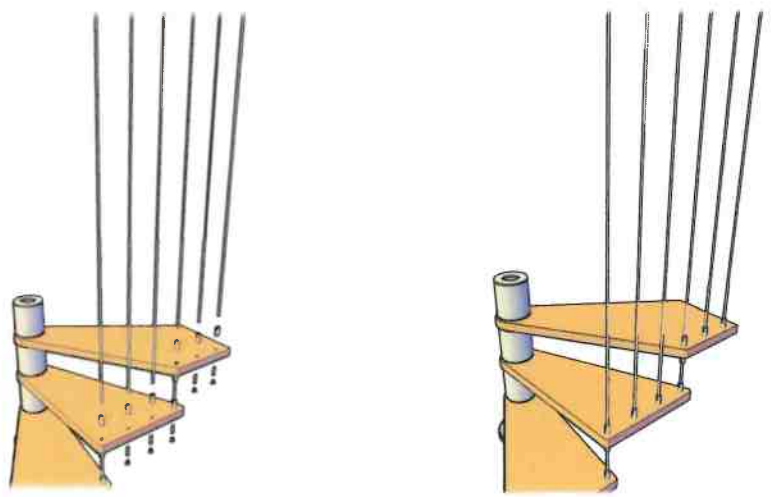

"C20"	**Annex 7 of European Technical Assessment 13/0877: spiral staircase "C20"**
Details of "R5", "R6" and "R10" railings and anchoring of the railing to steps	

Annex 8 of European Technical Assessment 13/0877: Spiral staircase "C20"

Parameter		Stair C20 diameters (mm)					
Diameter – round plan (mm)		1100	1200	1300	1400	1500	1600
Diameter – square plan (mm)		1100x1100	1200x1200	1300x1300	1400x1400	1500x1500	1600x1600
Maximum height between floors (mm)		3680	3680	3680	3680	3680	3680
Steps every 360° (No.)		12					
Number of risers (n)		16					
Riser (mm)	Min	210					
	Max	230					
Tread round steps (mm)	Min	23					
	Max	261	287	313	338	364	390
Tread square steps (mm)	Min	23					
	Max	283	312	340	370	399	427
Step width (mm)		447	497	547	597	647	697
Thickness of the step (mm)		10-40-60					
Length of the flight middle line (1) (mm)		5630	5950	6300	6660	7020	7400
Height of the handrail (mm)		From 980 to 1145					
Outer diameter of the balusters (mm)		From 6 to 42					
Outer diameter of the handrail (mm)		42-50					
Gap between balusters (mm)	Min	71,5	80	89	98	75	81,5
	Max	117	130	99	109	106,5	115

(1) with maximum tread and average riser for stairs with 16 risers

Components	Materials	Type	Mechanical characteristics
Structure: central tie-rod and steps (GM)	Steel	S235 JR EN 10025	f_{tk} = 360 N/mm²
		S275 JR EN 10025	f_{tk} = 430 N/mm²
Accessories for structure: spacers and balusters	Steel	S235 JR EN 10025	f_{tk} = 360 N/mm²
		S275 JR EN 10025	f_{tk} = 430 N/mm²
Nuts and bolts	Steel	8.8 class	f_{tk} = 800 N/mm² f_{vk} = 640 N/mm² $f_{d,N}$ = 560 N/mm² $f_{d,V}$ = 396 N/mm²
Steps (GL)	Finger Joint Beech	Beech glued laminated timber GL 24h EN 14080	f_{mk} = 24 N/mm² f_{vk} = 19.2 N/mm² f_{ck} = 24 N/mm²
Spacers, top/bottom of the central post and accessories	Polyamide	PAV 6 30% glass fibres	f_{tk} = 66 N/mm² f_{yk} = 38 N/mm²

"C20"	**Annex 8 of European Technical Assessment 13/0877: spiral staircase with wooden steps "C20"**
Geometry and materials of the stairs	

Annex 9 of European Technical Assessment 13/0877: Spiral staircase "C20"

Load-bearing capacity of the stair at ultimate limit state - Characteristic values of resistance

Assessment according to the limit state design method as proposed in EN 1990, by testing and calculation

Type of loading	Level kN	Level kN/m²	Level kN/m	γ_M[1]
Vertical variable point load acting on a step in the most unfavourable position Q_{Rk}	3,00			γ_s = 1,05 γ_w = 1,5 γ_p = 2,0 γ_Q = 1,5
Vertical variable uniformly distributed load q_{Rk}		3,00		
Horizontal variable uniformly distributed load acting on the barrier at the level of the handrail h_{Rk}			NPA	

1) γ_s= partial safety factor of steel
γ_w= partial safety factor of wood
γ_p= partial safety factor of polymers
γ_Q = partial safety factor taking account of the model's uncertainties and dimensional variations (EN 1990:2002/A1:2005/AC)

Load-displacement behaviour at serviceability limit state – Deflections under loading

Assessment by testing and calculation – worst cases considered

		Level
Deflection of the step under service load F_s (point load Q = 2,00 kN) related to the median line of the step w_Q	L ≤ 697 mm	14 mm
Deflection of the stair under service load F_s (point load Q = 2,00 kN) related to the clear width of the stair w_Q	L ≤ 7400 mm	16 mm

Proof of serviceability limit state is only given if the design value of the loads (F_k) does not exceed the values (F_s): $F_k \leq F_s$

Load-bearing capacity – Admissible loads

Minimum values from proof of ultimate limit state and serviceability limit state			
Vertical variable uniformly distributed load	q =	2,00	[kN/m²]
Vertical variable point load	Q =	2,00	[kN]
Horizontal variable uniformly distributed load	h_S =	NPA	

Vibration behaviour of the stair under single point load

Assessment by testing

Deflection and proper oscillation frequency Single point load of F = 1 kN acting on the most unfavourable point		
f_1 = proper oscillation frequency w = deflection of the stair	f_1 Level Hz	w Level mm
"C20" h = mm 3200, Ø = 1600 mm, 16 risers	5,76	4,08

Annex 10 of European Technical Assessment 13/0877: Spiral staircase "C20"

Assessment by calculation

Resistance to earthquake					
SL	Pver	Tr	ag	Fo	T*c
		Years	g		Seconds
SLO	81,0	30,0	0,066	2,400	0,260
SLD	63,0	50,0	0,084	2,390	0,270
SLV	10,0	475,0	0,205	2,430	0,300
SLC	5,0	975,0	0,257	2,480	0,320

ag: maximum horizontal acceleration of the ground;

Fo: maximum value of the amplification factor of the spectrum in horizontal acceleration;

T*c: initial period corresponding to the constant speed branch of the spectrum in horizontal acceleration;

Pver: exceedance probability;

Tr: return period.